Ruijie Reyee RG-ES126FGS-P Switch

Installation Guide

Document Version: V1.5
Date: May 9, 2026
Copyright © 2026 Ruijie Networks

Copyright

Copyright © 2026 Ruijie Networks

All rights are reserved in this document and this statement.

Without the prior written consent of Ruijie Networks, no organization or individual is permitted to reproduce, extract, back up, modify, or distribute the content of this document in any manner or form. It is also prohibited to translate the document into other languages or use any or all parts of it for commercial purposes.

Ruijie , Reyee and other Ruijie networks logos are trademarks of Ruijie Networks.

All other trademarks or registered trademarks mentioned in this document are owned by their respective owners.

Disclaimer

The products, services, or features you purchase are subject to commercial contracts and terms, and some or all of the products, services, or features described in this document may not be available for you to purchase or use. Except for the agreement in the contract, Ruijie Networks makes no explicit or implicit statements or warranties with respect to the content of this document.

The names, links, descriptions, screenshots, and any other information regarding third-party software mentioned in this document are provided for your reference only. Ruijie Networks does not explicitly or implicitly endorse or recommend the use of any third-party software and does not make any assurances or guarantees concerning the applicability, security, or legality of such software. You should choose and use third-party software based on your business requirements and obtain proper authorization. Ruijie Networks assumes no liability for any risks or damages arising from your use of third-party software.

The content of this document will be updated from time to time due to product version upgrades or other reasons, Ruijie Networks reserves the right to modify the content of the document without any notice or prompt.

This manual is designed merely as a user guide. Ruijie Networks has tried its best to ensure the accuracy and reliability of the content when compiling this manual, but it does not guarantee that the content of the manual is completely free of errors or omissions, and all the information in this manual does not constitute any explicit or implicit warranties.

Preface

Intended Audience

This document is intended for:

- Network engineers
- Technical support and servicing engineers
- Network administrators

Technical Support

- Ruijie Reyee website: https://reyee.ruijie.com
- Online support center: https://reyee.ruijie.com/en-global/support
- Case portal: https://www.ruijie.com/support/caseportal
- Community: https://community.ruijie.com
- Email support: service_rj@ruijie.com
- Live chat: https://reyee.ruijie.com/en-global/rita

Conventions

1. Signs

The signs used in this document are described as follows:

Danger

An alert that calls attention to safety operation instructions that if not understood or followed when operating the device can result in physical injury.

Warning

An alert that calls attention to important rules and information that if not understood or followed can result in data loss or equipment damage.

Caution

An alert that calls attention to essential information that if not understood or followed can result in function failure or performance degradation.

Note

An alert that contains additional or supplementary information that if not understood or followed will not lead to serious consequences.

Specification

An alert that contains a description of product or version support.

2. Note

This manual provides the device installation steps, hardware troubleshooting, module technical specifications, and specifications and usage guidelines for cables and connectors. It is intended for the users who have some experience in installing and maintaining network hardware. At the same time, it is assumed that the users are already familiar with the related terms and concepts.

Contents

Preface I

1 Product Overview 1

1.1 Package Contents 1

1.2 Product Appearance 2

1.2.1 Front Panel 2

1.2.2 Rear Panel 3

1.3 Technical Specifications 4

1.4 Cooling 7

2 Preparing for Installation 8

2.1 Safety Precautions 8

2.1.1 General Safety Precautions 8

2.1.2 Handling Safety 8

2.1.3 Electric Safety 8

2.1.4 Electrostatic Discharge Safety 9

2.1.5 Laser Safety 9

2.2 Installation Environment Requirements 10

2.2.1 Bearing Requirements 10

2.2.2 Ventilation Requirements 10

2.2.3 Space Requirements 10

2.2.4 Temperature/Humidity Requirements 10

2.2.5 Cleanliness Requirements 11

2.2.6 Grounding Requirements 11

2.2.7 Anti-interference Requirements 12

2.2.8 Lightning Protection Requirements 12

2.2.9 Installation Site Requirement 12

2.3 Rack Installation Requirements 13

2.4 Tools 14

3 Installing the Switch 15

3.1 Before You Begin 15

3.2 Precautions 15

3.3 Mounting the Switch 15

3.3.1 Rack Installation Requirements 16

3.3.2 Mounting the Switch in a Rack 16

3.4 Grounding the Switch 17

3.5 Connecting the Cables 17

3.6 Checking after Installation 17

4 Debugging 18

4.1 Powering on the Switch 18

4.1.1 Checklist Before Power-On 18

4.1.2 Checklist After Power-on 18

4.2 Adding Unmanaged Device to Topology 18

4.2.1 Scanning QR-code of Unmanaged Device 18

4.2.2 Adding Unmanaged Device Manually 19

5 Appendix 21

5.1 Connectors and Media 21

5.2 Mini-GBIC and SFP Modules 23

5.3 Lightning Protection 24

5.3.1 Installing AC Power Arrester (lightning protection cable row) 24

5.3.2 Installing the Ethernet Port Arrester 25

1 Product Overview

RG-ES126FGS-P is a PoE switch with high performance and multiple working modes. The switch provides 24 10/100 Mbps self-adaptive Ethernet RJ45 ports, one 10/100/1000 Mbps self-adaptive Ethernet RJ45 port, and one GE combo port. All ports have line-rate forwarding performance, contributing to greater network flexibility. Featuring highly-integrated design and easy operation, the device is applicable for security monitoring and Wi-Fi hotspots arrangement. RG-ES126FGS-P offers a simple, economical, standard, and high-performance network solution to improve work efficiency. The LEDs on the front panel help you to check the operating status of the switch and diagnose the network faults.

Compliant with IEEE 802.3at and backward compatible with IEEE 802.3af, the 24 100M Ethernet RJ45 ports support PoE power supply. Serving as a PoE device, the switch can automatically identify the powered devices compliant with the standard and supply power for such devices through Ethernet cables. The switch works in extend mode, default mode or Isolation mode. You can switch the working mode by toggling the DIP switch on the front panel. The multiple modes of the switch allow you to expand the home network and office network without being limited by the electric wiring, meeting the networking requirements of small- and medium-sized enterprises, intelligent community, hotels, offices, and campus.

1.1 Package Contents

Table 1-1 Package Contents

Item	Quantity
RG-ES126FGS-P Switch	1
Mounting Brackets	2
Power Cord	1
M4 x 8 mm Screw	6
User Manual	1
Warranty Card	1

Note

The package contents are subject to the purchase contract. The actual delivery prevails. Please check the items carefully against the package contents or purchase contract. If you have any questions or there are any errors, please contact your distributor.

1.2 Product Appearance

The RG-ES126FGS-P switch provides 24 10/100 Base-TX self-adaptive Ethernet ports, one 10/100/1000 Base-TX GE port, one 10/100/1000 Base-TX combo port, one DIP switch, one system status LED, and other LEDs on the front panel. On the rear panel of the switch, there is an AC power plug and a grounding stud.

Figure 1-1 Appearance of a RG-ES126FGS-P Switch

1.2.1 Front Panel

Figure 1-2 Front Panel of a RG-ES126FGS-P Switch

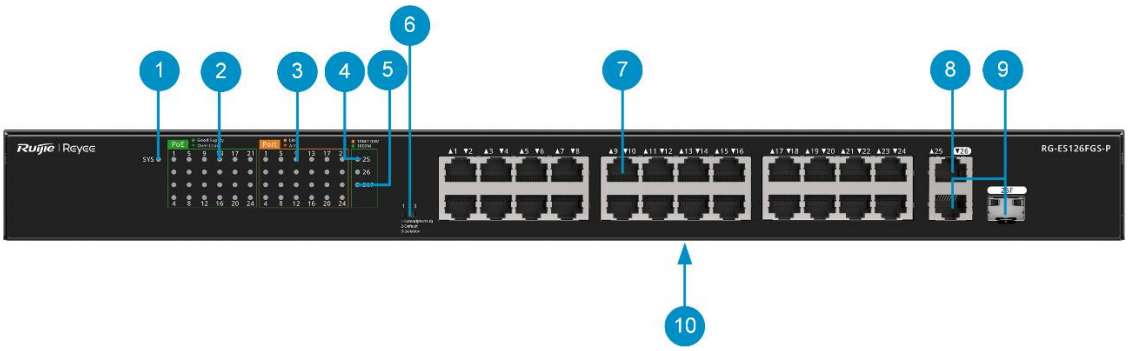

Table 1-2 Front Panel Specifications

No.	Item	Description
1	System Status LED	● Off: The switch is not powered on. ● Solid on: The switch is powered on.
2	PoE Status LED	● Solid green: PoE is enabled. ● Flashing green: PoE overload occurs. ● Off: PoE is disabled.
3	10/100 Base-TX Link/Act LED	● Solid orange: The port has made a successful 10/100 Mbps link. ● Flashing orange: The port is transmitting and receiving data at 10/100 Mbps. ● Off: The port is not connected.
4	10/100/1000 Base-TX GE Port LED	● Solid orange: The port has made a successful 10/100 Mbps link. ● Flashing orange: The port is transmitting and receiving data at 10/100 Mbps. ● Solid green: The port has made a successful 1000 Mbps link up. ● Flashing green: The port is transmitting and receiving data at 1000 Mbps.

No.	Item	Description
		● Off: The port is not connected.
5	10/100/1000 Base-TX Combo Port LED	● Solid orange: The port has made a successful 10/100 Mbps link. ● Flashing orange: The port is transmitting and receiving data at 10/100 Mbps. ● Solid green: The port has made a successful 1000 Mbps link. ● Flashing green: The port is transmitting and receiving data at 1000 Mbps. ● Off: The port is not connected.
6	DIP Switch	The DIP switch is used to switch the working mode of the device. ● Extend mode: The rate of ports 1 to 24 is reduced to 10 Mbps. Typically, the transmission distance is 200 m (656.17 ft), which is up to 250 m (820.21 ft) in the laboratory environment with Cat5e cables or higher. In addition, factors such as cable quality, powered device performance, and ambient temperature may cause the transmission distance to be less than 250 m (820.21 ft). ● Default mode: Flow control is enabled and all ports can communicate with each other. ● Isolation mode: Ports 1 to 24 cannot communicate with each other but they can communicate with ports 25 and 26.
7	10/100 Base-TX Self-adaptive Ethernet Ports	24 10/100 Mbps self-adaptive Ethernet RJ45 ports (Auto MDI/MDIX) support PoE power supply.
8	10/100/1000 Base-TX GE Port	One 10/100/1000 Mbps self-adaptive Ethernet RJ45 port (Auto MDI/MDIX).
9	10/100/1000 Base-TX Combo Port	One 10/100/1000 Base-T combo port. The GE port and the copper port cannot be used at the same time.
10	Nameplate	On the bottom of the device

1.2.2 Rear Panel

Figure 1-3 Rear Panel of a RG-ES126FGS-P Switch

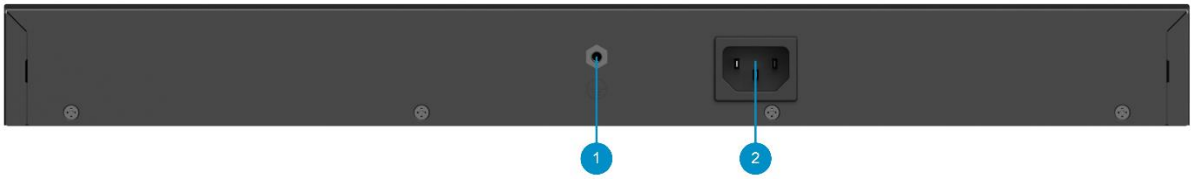

Table 1-3 Rear Panel Specifications

No.	Item	Description
1	Grounding Stud	Connect the grounding stud to the protection ground with the grounding cable to provide grounding protection.

No.	Item	Description
2	AC Input Plug	Connect the power cord to the AC input plug to power on the switch.

1.3 Technical Specifications

Table 1-4 Technical Specifications of a RG-ES126FGS-P Switch

System Specifications	Flash memory	4 MB
	Forwarding rate	6.5 Mpps
	Switching capacity	8.8 Gbps(bit/s)
Port Specifications	Total number of RJ45 ports	26
	Total number of optical ports	1
	Number of 1GE combo ports	1
	Number of 1GE SFP ports	1
	Number of 10/100BASE-T ports	24
	Number of 10/100/1000BASE-T ports	2
	Long-distance transmission	Yes **Notes:** ● Support a stable transmission distance of up to 200 m (656.17 ft.). In a lab environment, with CAT5e or better Ethernet cables, the transmission distance can reach up to 250 m (820.21 ft.). ● Refer to the note below the specifications table for other restrictions on the long-distance transmission feature.
	DIP switch	● Extend mode: The rate of Ports 1 to 24 is reduced to 10 Mbps, but the maximum transmission distance can be up to 200 meters (Cat5e cables required). Flow control on. ● Default mode: All ports can communicate with each other. Flow control on. ● Isolation mode: Ports 1 to 24 cannot communicate with each other, but they can communicate with ports 25 and 26. Flow control on.

Power Supply and Consumption	PoE Out standard	PoE/PoE+ (IEEE 802.3af/at)
	Number of PoE/PoE+ Out ports	24
	PoE budget per port	30 W
	PoE budget	370 W
	PoE power pins	1–2 (+), 3–6 (-)
	Power input	220 V AC power supply: ● Rated input voltage: 100 V AC to 240 V AC, 50 Hz to 60 Hz ● Maximum input voltage: 90 V AC to 264 V AC, 47 Hz to 63 Hz ● Rated input current: 6 A
	Maximum power consumption	● 20 W (with no PoE load) ● 390 W (with PoE full load)
	Power supply	Fixed power supply
Dimensions and Weight	Casing	Metal
	Product dimensions (W x D x H)	440 mm x 214.9 mm x 44 mm (17.32 in. x 8.46 in. x 1.73 in.)
	Weight	● 2.62 kg (5.78 lbs) (without packaging materials) ● 3.78 kg (8.33 lbs) (with packaging materials)
Environment and Reliability	Fan	2 x fixed fan
	Cooling	Air cooling, right-to-left airflow
	Acoustic noise	< 40 dB: 25℃ (77°F)
	Mounting options	Rack
	Hot swapping of cables	Hot swapping supported by the service port and power connector
	MTBF	200,000 hours
	Operating temperature	0°C to 45°C (32°F to 113°F)
	Storage temperature	–40°C to +70°C (–40°F to +158°F)
	Operating humidity	10% RH to 90% RH (non-condensing)
	Storage humidity	5% RH to 95% RH (non-condensing)

	Altitude	–500 m to +5,000 m (–1,640.42 ft. to +16,404.20 ft.)
	ESD protection	● Air discharge: 8 kV ● Contact discharge: 6 kV
	Surge protection	● Service port: ±4 kV for common mode ● Power connector: ±6 kV for common mode and ±6 kV for differential mode
	Ground Leakage Current	≤ 3.5 mA
Certification and Regulatory Compliance	EMC	EN 55032 EN IEC 61000-3-2 EN 61000-3-3 EN 55035 EN 300 386
	Safety compliance	EN 62368-1 IEC 62368-1
	Certification	CE, CB
Product Information	Warranty	3 years

CAUTION：DOUBLE POLE/NEUTRAL FUSING

Electric shock hazard！The fuse may be in the neutral, and that the mains shall be disconnected to de-energize the phase conductors.

Warning

- Operation of this equipment in a residential environment could cause radio interference.
- You are advised to keep the device out of the reach of children.

Notes

Before using long-distance transmission, the following requirements must be met.

1. A CAT5e or better Ethernet cable must be used, with an impedance of less than 25 ohms over a 100-meter (328.08-foot) length.

2. The connected device also supports long-distance transmission.

3. The supply voltage should be 54 V.

4. After long-distance transmission is enabled on a port with PoE Out supported, its rate will decrease to 10 Mbps. In addition, the cable material, powered device performance, ambient temperature, and other factors will affect the actual transmission distance.

1.4 Cooling

The RG-ES126FGS-P switch adopts fan cooling design. To ensure the normal operation of the device, maintain a minimum clearance of 10 cm (3.94 in.) around the device. Dust the device every three months to avoid blocking the ventilation openings.

2 Preparing for Installation

2.1 Safety Precautions

Note

- To avoid device damage and physical injury, please read the safety precautions carefully before installing the device.
- The following safety precautions may not cover all possible dangers.

2.1.1 General Safety Precautions

- Install the device in a standard 19-inch cabinet.
- Do not place the device in a wet position, and keep the device away from liquid. Keep the chassis clean and dust-free.
- Place the device away from heat sources.
- Make sure that the cabinet and the power distribution system are properly grounded.
- Do not place the device in walking areas.
- Do not wear loose clothes, ornaments, or other items that may be hooked by the chassis during installation and maintenance.
- Keep the tools and components away from walking areas.

2.1.2 Handling Safety

- Avoid handling the device frequently after installation.
- Cut off all power supplies and unplug all power cords before moving and handling the device.
- Do not handle the device alone. At least two persons are needed. Keep balance and prevent personal injuries when handling the device.

2.1.3 Electric Safety

Warning

- Improper or incorrect electric operations may cause a fire, electric shock, and other accidents, and lead to severe and fatal personal injury and device damage.
- Direct or indirect contact with high voltage or mains supply through wet objects may cause fatal dangers.

- Observe local rules and regulations when performing electric operations. Only personnel with relevant qualifications can perform such operations.
- Check whether there are potential risks in the work area. For example, check whether the power supply is grounded, whether the grounding is reliable, and whether the ground is wet.
- Learn about the position of the indoor emergency power switch before installation. Cut off the power switch in case of accidents.
- Check the device carefully before shutting down the power supply.

- Select a correct leakage protector (also referred to as “leakage current switch” or “leakage current breaker”) for the power supply system. When there is a risk of leakage and electric shock, the power supply is automatically disconnected. A correct leakage protector should meet the following requirements:
  - The rated leakage action current of each leakage protector is greater than twice of the theoretical maximum leakage current of all the power supplies in the system. For example, if a system is equipped with 16 identical power supplies, the leakage current of each power supply is equal to or less than 3.5 mA, and the leakage current of the system totals 56 mA. A leakage protector with 30 mA rated action current supports less than five power supplies (that is, Action current of the leakage protector/2/Maximum leakage current of each power supply = 30/2/3.5 ≈ 4.28). In other words, the leakage protector with 30 mA rated action current supports no more than four power supplies. In this case, the 16 power supplies in the system require at least four leakage protectors with 30 mA rated action current and each leakage protector supports four power supplies.

    If power supplies in a system differ in models, the rated leakage action current of each leakage protector divided by two is greater than the sum of maximum leakage currents of all the power supplies.
  - The rated leakage non-action current of a leakage protector shall be 50% of the leakage action current. Take a leakage protector with 30 mA rated leakage action current as an example. The rated leakage non-action current shall be 15 mA. When the leakage current is below 15 mA, the protector shall not act.

Caution

- To guarantee personal safety, the rated leakage action current of each leakage protector in the system must be equal to or less than 30 mA (human body safety current is 30 mA). When twice of the total leakage current of the system is greater than 30 mA, the system must be equipped with two or more leakage protectors.
- For the leakage current value, see 1.3 Technical Specifications.

2.1.4 Electrostatic Discharge Safety

- Ensure that the device is properly grounded.
- Keep the indoor installation environment free of dust.
- Maintain proper humidity conditions in the installation environment.
- Before installing various pluggable modules, please wear an anti-static wrist strap and ensure that the anti-static wrist strip is properly grounded.

2.1.5 Laser Safety

A device with an optical port usually supports multiple types of optical transceivers, all of which are Class I laser products. Pay attention to the following during the use of optical transceivers:

- When an optical transceiver is in operation, ensure that its port is connected to an optical fiber or covered by a dust cap to keep out dust and prevent it from burning your eyes.
- When an optical transceiver is in operation, do not look into its port after removing the optical fiber. Doing so may result in eye injury.

Figure 2-1 Laser Product Warning

Warning

Do not approach or look directly into any optical port under any circumstances. This may cause permanent damage to your eyes.

2.2 Installation Environment Requirements

The device must be installed indoors. To ensure its normal operation and prolonged service life, the installation site must meet the following requirements.

2.2.1 Bearing Requirements

Evaluate the weight of the switch and its accessories (for example, the cabinet, chassis, and power supply modules), and ensure that the ground of the installation site meets the requirements.

2.2.2 Ventilation Requirements

Maintain a proper clearance around the device for air circulation and normal heat dissipation. After various cables are connected, bundle the cables or place them in the cable management bracket to avoid blocking air inlets.

2.2.3 Space Requirements

It is recommended that the width of the equipment room corridor be greater than 0.8 m (31.50 in.) to ensure enough space for chassis handling and module maintenance.

Please do not install the device against the wall. Instead, maintain a minimum clearance of 0.4 m (15.75 in.) around the device for heat dissipation and device maintenance.

2.2.4 Temperature/Humidity Requirements

To ensure the normal operation and prolonged service life of the device, maintain an appropriate temperature and humidity in the equipment room.

The equipment room with too high or too low temperature and humidity for a long period may cause damage to the device.

- In an environment with high relative humidity, the insulating material may have poor insulation or even leak electricity.
- In an environment with low relative humidity, the insulating strip may dry and shrink, loosening screws.
- In a dry environment, static electricity is prone to occur and damage the internal circuits of the device.
- Too high temperatures can accelerate the aging of insulation materials, greatly reducing the reliability of the

device and severely affecting its service life.

Note

The ambient temperature and humidity of the device are measured at the point that is 1.5 m (59.06 in.) above the floor and 0.4 m (15.75 in.) before the device rack when there is no protective plate in front or at the back of the rack.

2.2.5 Cleanliness Requirements

Dust poses a major threat to the device. The indoor dust takes on a positive or negative static electric charge when falling on the device, causing poor contact of the metallic joint. Such electrostatic adhesion may occur more easily when the relative humidity is low, not only affecting the service life of the device, but also causing communication faults. The following table describes the requirements for the dust content and granularity in the server room.

Table 2-1 Requirements for Dust

Dust	Unit	Content
Dust particles (diameter ≥ 0.5 μm)	Particles/m^3	≤ 3.5×10^6
Dust particles (diameter ≥ 5 μm)	Particles/m^3	≤ 3.5×10^4

Apart from dust, the salt, acid, and sulfide in the air in the server room must meet strict requirements. These harmful substances will accelerate metal corrosion and component aging. Therefore, the equipment room should be properly protected against the intrusion of harmful gases, such as sulfur dioxide, hydrogen sulfide, nitrogen dioxide, and chlorine gas. The following table lists limit values for harmful gases.

Table 2-2 Requirements for Gases

Gas	Average (mg/m^3)	Maximum (mg/m^3)
Sulfur dioxide (SO_2)	0.3	1.0
Hydrogen sulfide (H_2S)	0.1	0.5
Nitrogen dioxide (NO_2)	0.5	1.0
Chlorine gas (Cl_2)	0.1	0.3

Note

Average refers to the average value of harmful gases measured in one week. **Maximum** refers to the upper limit of harmful gases measured in one week, and the maximum value lasts up to 30 minutes every day.

2.2.6 Grounding Requirements

A proper grounding system is the basis for stable and reliable running and is indispensable for preventing lightning strikes and interference. Carefully check the grounding conditions at the installation site according to the grounding specifications, and complete grounding properly based on the actual situation.

- Safety Grounding

  Ensure that the cabinet and power distribution device are properly grounded when the device uses the AC power supply. Otherwise, electric shock may occur when the insulation resistance between the power supply inside the device and the chassis becomes small.

Caution

- Please adopt protection grounding connections in buildings so that the device can be connected to the protection ground.
- Check whether the AC socket is reliably connected to the protection ground of the building. If not, a protection ground wire should be used to connect the protection ground lug of the AC socket to the protection ground of the building.
- The cross-sectional area of the protection ground cable should be at least 0.75 mm2 (18 AWG).

- Lightning Grounding

  The lightning protection system of facilities is standalone, and is composed of a lightning rod, a lower conductor, and a connector connected to the grounding system. The grounding system is usually used for power reference grounding and safety grounding of the cabinet. Lightning grounding is required only for facilities and is not required for the device.

- EMC Grounding

  Grounding required for electromagnetic compatibility (EMC) includes shielded grounding, filter grounding, noise and interference suppression, and level reference, which contribute to the overall grounding requirements. The grounding resistance should be less than 1 ohm, and the grounding lugs of the cabinet should be grounded before the running of the device.

2.2.7 Anti-interference Requirements

- Take interference prevention measures for the power supply system.
- Keep the device away from the grounding equipment or lightning and grounding equipment of the power device as much as possible.
- Keep the device far away from high-frequency current devices such as high-power radio transmitting station and radar transmitting station.
- Take electromagnetic shielding measures when necessary.

2.2.8 Lightning Protection Requirements

The device can guard against lightning strikes. As an electric device, it may still be damaged by strong lightning strikes. Take the following lightning protection measures:

- Ensure that the grounding cable of the rack is in good contact with the ground.
- Ensure that the neutral point of the AC power socket is in good contact with the ground.
- You are advised to install a power lightning arrester in front of the power input end to enhance the lightning prevention for the power supply.

2.2.9 Installation Site Requirement

Regardless of whether the device is installed into a rack or on a workbench, the following conditions must be met:

- Maintain a proper clearance around the air inlets and ventilation openings for heat dissipation.
- The device is equipped with two cooling fans. Cold air is drawn through the ventilation openings around the chassis and exhausted from the rear of the chassis through the fans. Thus, maintain a minimum clearance of 15 cm (5.90 in.) around the device to ensure normal heat dissipation. You are advised to install the device in a standard 19-inch rack. If not, you can place the device on a clean workbench. If the installation area is hot, air conditioning is recommended.
- Ensure that the rack and workbench have proper ventilation and heat dissipation.
- Ensure that the rack and workbench are sturdy enough to support the weight of the device and its accessories.
- Ensure that the rack and workbench are properly grounded.

2.3 Rack Installation Requirements

If you want to install the device into a rack, confirm that the rack meets the following requirements.

(1) Please use a standard 19-inch rack with four columns.

(2) The distance between square hole strips on the left and right sides of the standard 19-inch rack is 465 mm (18.31 in.).

Figure 2-2 A Standard 19-inch Rack

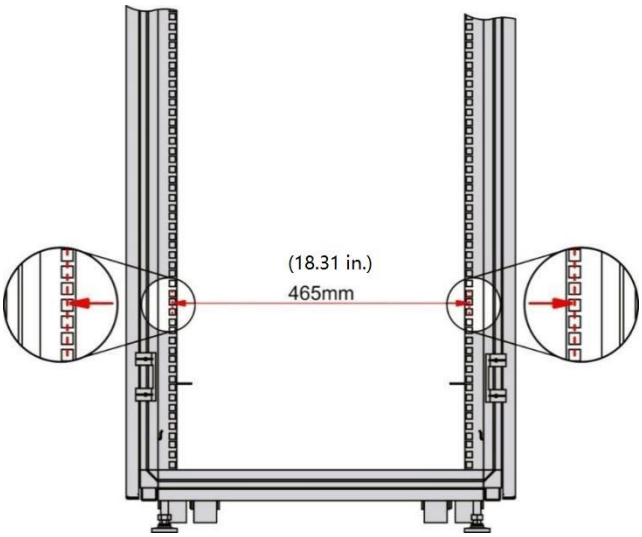

(3) The distance between the square hole strip on the rack column and the outer side of the front cabinet door is greater than 180 mm (7.09 in.) and the thickness of the front cabinet door is less than 25 mm (0.98 in.). Therefore, the available space is greater than 155 mm (6.10 in.). The rack depth (the distance between the front and rear doors) is greater than 1000 mm (39.37 in.).

(4) The slide rails (or trays) of the rack meet the bearing requirements of the device.

(5) A grounding lug is installed properly on the rack to ensure that the device is fully grounded.

(6) The rack is well ventilated and the porosity of the front and rear panels is greater than 50%.

2.4 Tools

Table 2-3 Tools

Common Tools	Phillips screwdrivers, power cords, Ethernet cables, fastening bolts, diagonal pliers, and binding straps
Special Tools	Antistatic gloves, wire stripper, crimping pliers, crystal connector crimping pliers, and wire cutter
Meter	Multimeter
Relevant Devices	PC, display, and keyboard

Note

The RG-ES126FGS-P switch is delivered without a tool kit. The tool kit is customer-supplied.

3 Installing the Switch

Caution

Ensure that requirements in Chapter 2 are all met.

3.1 Before You Begin

- The installation site provides sufficient space for heat dissipation.
- The installation site meets the temperature and humidity requirements of the device.
- The power supply and required current are available in the installation site.
- The Ethernet cables have been deployed in the installation site.
- The selected power supply modules meet the system power requirements.
- The position of the indoor emergency power switch is learned before installation. The power switch is cut off first in case of accidents.

3.2 Precautions

To ensure the normal operation and prolonged service life of the device, please observe the following precautions.

- Do not power on the device during installation.
- Install the device in a well-ventilated position.
- Do not subject the device to high temperatures.
- Keep away from high voltage cables.
- Install the device indoors.
- Do not expose the device in a thunderstorm or strong electric field.
- Keep the device clean and dust-free.
- Cut off the power supply before cleaning the device.
- Do not wipe the device with a damp cloth.
- Do not wash the device with liquid.
- Do not open the enclosure when the device is working.
- Fasten the device tightly.

3.3 Mounting the Switch

The RG-ES126FGS-P switch can be installed in a 19-inch EIA rack. Install the switch into the rack by using the delivered accessories.

3.3.1 Rack Installation Requirements

(1) Before installing the rack, plan the available space for the rack. Reserve sufficient space for the front and rear doors of the rack for device maintenance.

(2) Mount and fasten the rack at the designed location as planned.

(3) Install the appropriate cable management bracket and cables.

(4) Install the tray and fiber termination box on the rack according to the number of switches in the rack.

3.3.2 Mounting the Switch in a Rack

(1) Take out the two L-shaped brackets and six M4 x 8 mm screws from the packing materials. Secure a bracket to each side of the switch by using three screws.

Figure 3-1 Attaching the Mounting Brackets to the Switch

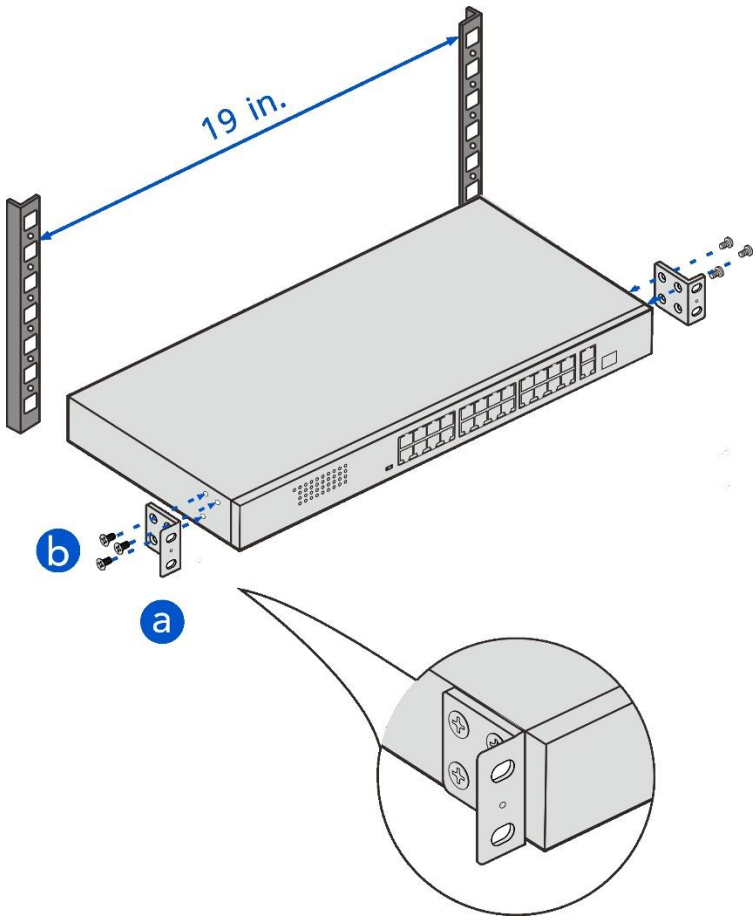

(2) Place the switch horizontally to an appropriate position in the rack. Use four M6 screws and matching cage nuts (both screws and nuts are to be provided by the user) to secure the other end of the mounting brackets to the square hole rack posts.

Figure 3-2 Securing the Switch to the Rack

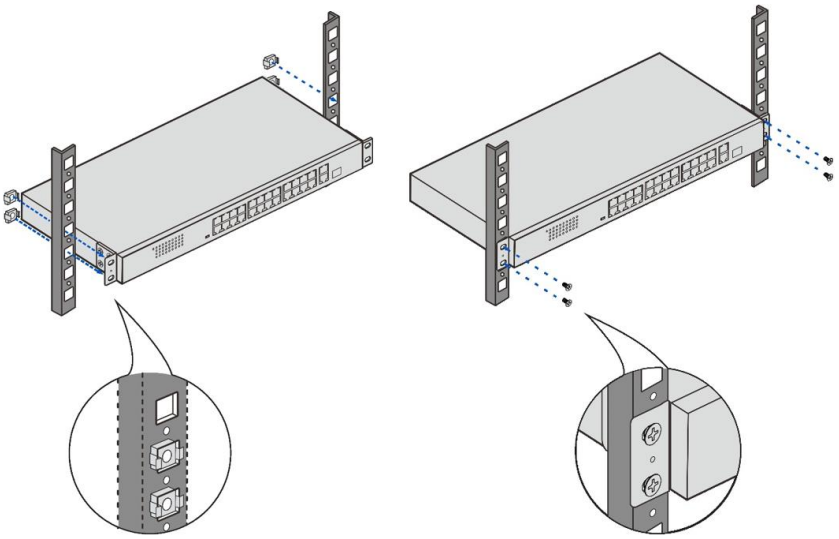

3.4 Grounding the Switch

Connect the grounding cable to the grounding stud on the back panel of the device.

Note

The grounding cable is not delivered with the switch and should be purchased separately.

3.5 Connecting the Cables

Warning

Please use the power cord delivered with the device to prevent accidents.

After installing the device in the rack, connect the switch to the external interfaces with Ethernet cables. Please follow the steps.

(1) Connect one end of the provided power cord to the system power plug.

(2) Turn off the main power supply and connect the other end of the power cord to the power socket.

(3) Use an Ethernet cable with the RJ45 connector to connect the device to the network.

3.6 Checking after Installation

- Verify that the grounding cable is properly connected.
- Verify that the cables and power cord are properly connected.
- Verify that the cables are routed indoors. If not, check whether the power supply and interfaces are protected from lightning strikes.
- Verify that a minimum clearance of 10 cm (3.94 in.) is maintained around the device for air circulation.

4 Debugging

4.1 Powering on the Switch

4.1.1 Checklist Before Power-On

- The switch is connected to earth ground.
- The power cord is properly connected.
- The power voltage meets the requirement.

4.1.2 Checklist After Power-on

After the device is powered on, check the following items:

- LEDs of the switch are in the normal state.
- The main program is loaded properly.
- Service ports can forward data properly.

4.2 Adding Unmanaged Device to Topology

Caution

There must be devices that can be managed in the network, including Reyee EG or ES2/NBS switches.

Scenarios:

- Add a new unmanaged switch: Select its uplink device, and scan the QR-code on the switch or manually add it to the topology.
- If the unmanaged switch is already added to the topology and displayed as a virtual device: Select the virtual device, and scan its QR-code or manually enter its information to the topology.

4.2.1 Scanning QR-code of Unmanaged Device

(1) Tap **Topology** to open the topology page.

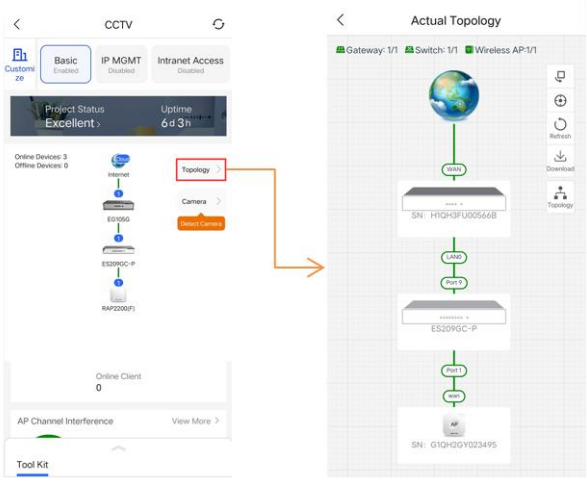

(2) Tap the **Topology** button, and select the existing managed device. To add an unmanaged downlink switch by scanning its QR-code, select **Scan to Add**.

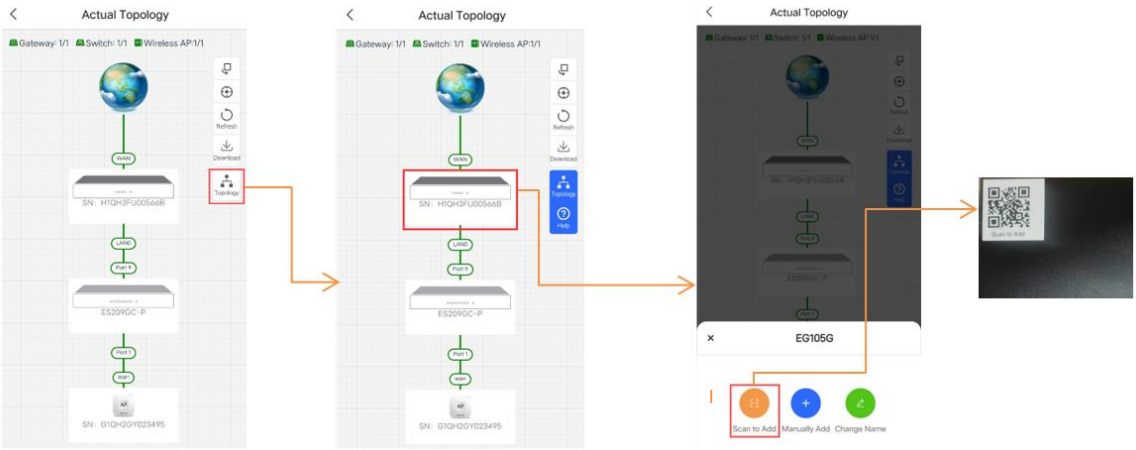

(3) After the device is detected, select its uplink port. And the device is added successfully.

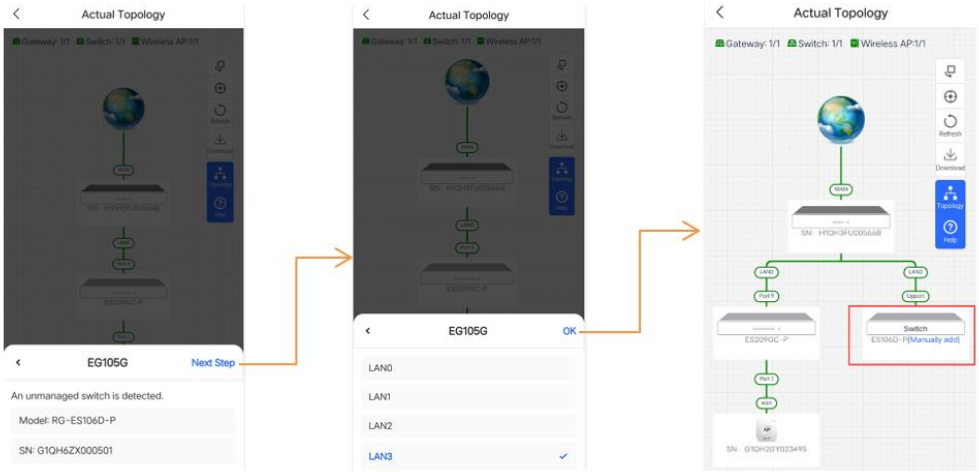

4.2.2 Adding Unmanaged Device Manually

(1) Tap **Topology** to enter the topology page.

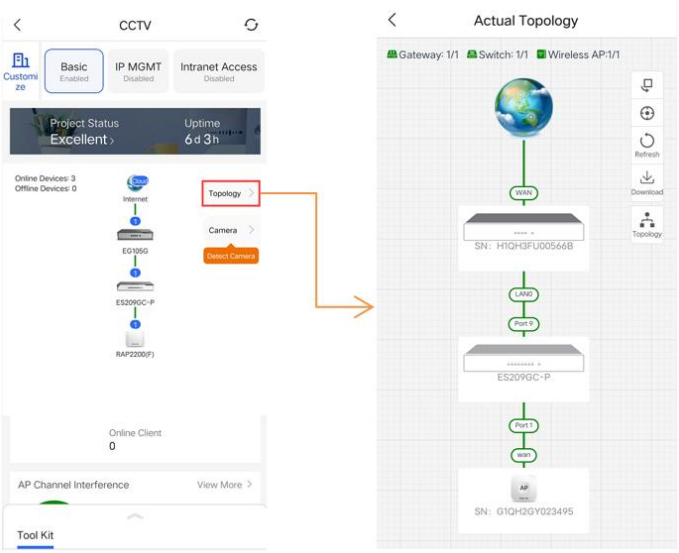

(2) Tap the **Topology** button, and select the existing managed device. To add an unmanaged downlink switch manually, select **Manually Add**.

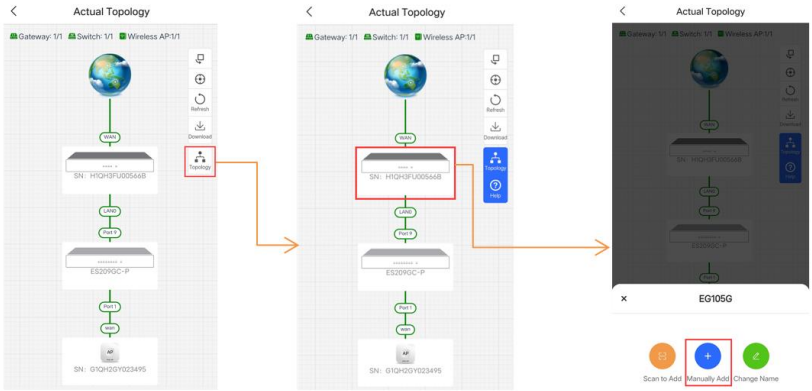

(3) Select the device model and its uplink port, and the device is added successfully.

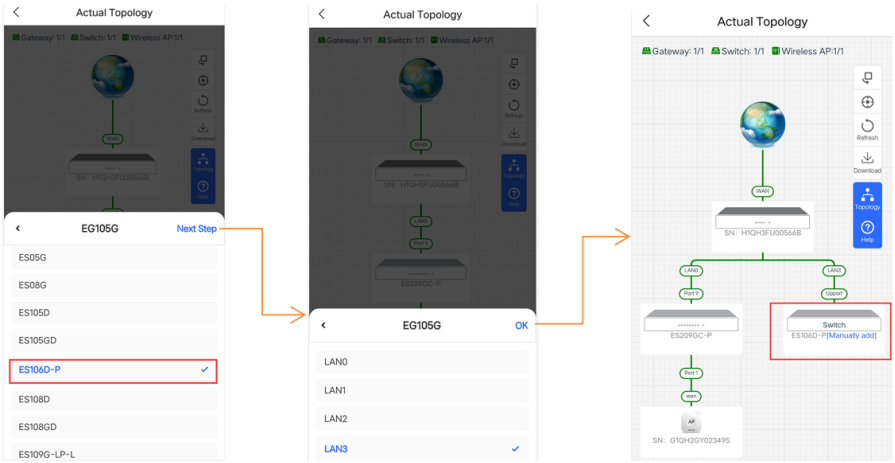

5 Appendix

5.1 Connectors and Media

- **1000BASE-T/100BASE-TX/10BASE-T**

The 1000BASE-T/100BASE-TX/10BASE-T is a 10/100/1000 Mbps self-adaptive Ethernet port that supports auto MDI/MDIX Crossover.

Compliant with IEEE 802.3ab, 1000BASE-T requires Category 5 or Category 5e 100-ohm UTP or STP (STP is recommended) with a maximum distance of 100 m (328.08 ft).

The 1000BASE-T port uses four pairs of wires for data transmission, all of which must be connected. Figure 5-1 shows the connection of twisted pairs used by a 1000 Base-T port.

Figure 5-1 Figure 5-1 1000BASE-T Connection

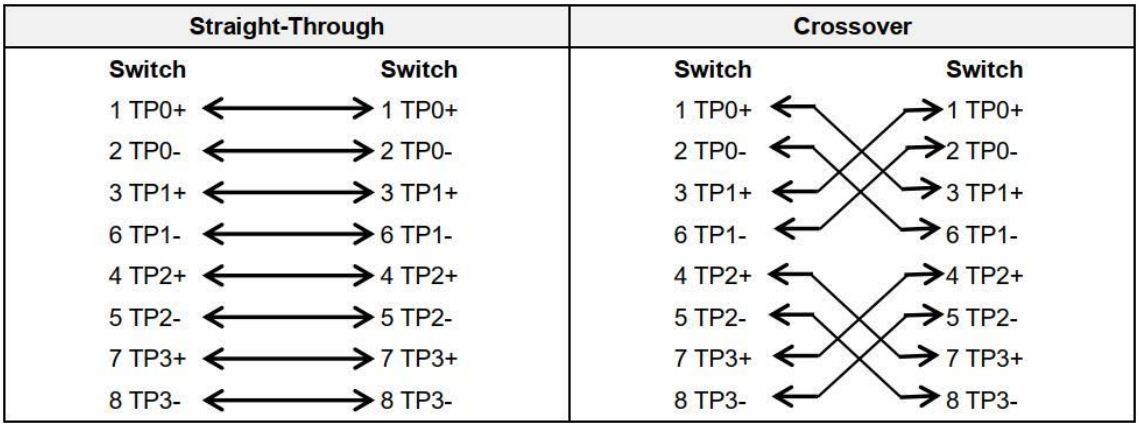

In addition to the above cables, 10BASE-T uses Category 3, 4, 5 100-ohm UTP/STP and 100BASE-T uses Category 5 100-ohm UTP/STP for connections. Both support a maximum length of 100 meters (328 ft). Figure 5-2 shows 100BASE-TX/10BASE-T pin assignments.

Figure 5-2 100BASE-TX/10BASE-T Pin Assignments

Pin	Socket	Plug
1	Input Receive Data+	Output Transmit Data+
2	Input Receive Data-	Output Transmit Data-
3	Output Transmit Data+	Input Receive Data+
6	Output Transmit Data-	Input Receive Data-
4,5,7,8	Not used	Not used

Figure 5-3 shows wiring of straight-through and crossover cables for 100BASE-TX/10BASE-T.

Figure 5-3 100BASE-TX/10BASE-T Twisted Pair Connection

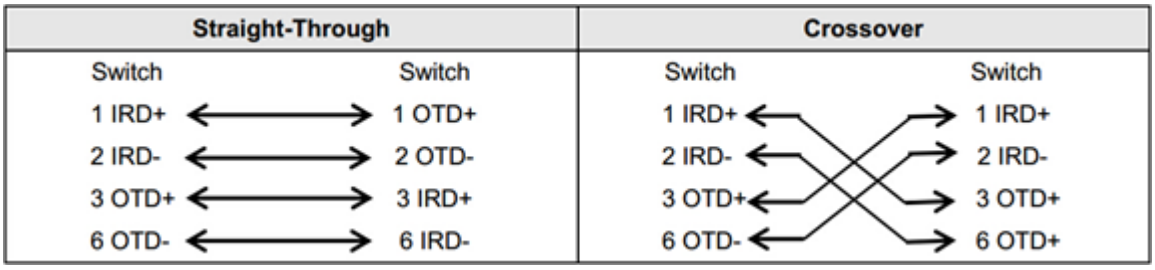

- **Fiber-Optic Cable Connection**

Please choose SMF or MMF optic cables according to the module types.

Figure 5-4 Fiber-Optic Cable Connection

5.2 Mini-GBIC and SFP Modules

We provide GE SFP modules (Mini-GBIC modules) according to the SFP port types. You can select the module to fit your specific needs. The following models and technical specifications of some GE SFP modules are listed for your reference.

Table 5-1 Models and Specifications of Mini-GBIC (SFP) Transceiver Module

Mini-GBIC (SFP)	Wave-length (nm)	Fiber Type	Core Size (μm)	Modular Bandwidth (MHz/km)	Cabling Distance	Max Transmit Power (dbm)	Max Receive Power (dbm)	Standard
FE-SFP-LX-MM1310	1310	MMF	62.5/125	N/A	2 km	-14	-14	IEEE 802.3
FE-SFP-LH15-SM1310	1310	SMF	9/125	N/A	15 km	-8	-8	
Mini-GBIC-SX	850	MMF	62.5 62.5 50.0 50.0	160 200 400 500	220 m 275 m 500 m 550 m	-4	-17	
Mini-GBIC-LX	1310	SMF	9/10	N/A	10 km	-3	-20	
SFP-MM850	850	MMF	62.5 62.5 50.0 50.0	160 200 400 500	220 m 275 m 500 m 550 m	-4	-17	
SFP-SM1310	1310	SMF	9/10	N/A	10 km	-3	-20	
Mini-GBIC-LH40	1310	SMF	9/125	N/A	40 km	3	-3	
Mini-GBIC-ZX50	1550	SMF	N/A	N/A	50 km	0	-22	
Mini-GBIC-ZX80					80 km	4.7	-22	
Mini-GBIC-ZX100					100 km	5	-9	

Mini-GBIC (SFP)	Wave-length (nm)	Fiber Type	Core Size (μm)	Modular Bandwidth (MHz/km)	Cabling Distance	Max Transmit Power (dbm)	Max Receive Power (dbm)	Standard
Mini-GBIC-GT	N/A	CAT 5 UTP	N/A	N/A	100 m	N/A	N/A	

5.3 Lightning Protection

5.3.1 Installing AC Power Arrester (lightning protection cable row)

The AC power port must be connected to an external lightning protection power strip to prevent the switch from being struck by lightning when the AC power cord is introduced from the outdoor and directly connected to the power port of the switch. The lightning protection power strip can be fixed on the cabinet, workbench, or wall in the equipment room by using cable ties and screws. AC power enters the lightening protection power strip and then gets to the switch.

Figure 5-5 Power Arrester

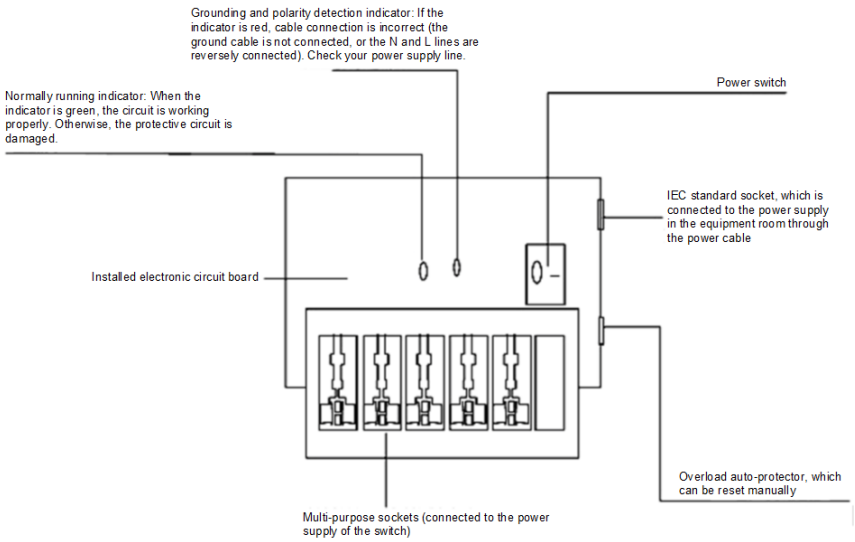

Caution

The power arrester is not delivered with the switch. Please purchase it based on actual requirements.

Precautions for installation:

- Make sure that the PE terminal of the power arrester has been well-grounded;
- After the switch AC power plug is connected to the socket of the power arrester (lightning protection cable row), lightning protection function implements if the RUN LED is Green and the ALARM LED is OFF.
- If the ALARM LED on the power arrester is Red, check whether it is caused by poor grounding connection or

by the reversed connection of the Null and Live lines: Use a multimeter to measure the polarity of the power socket for the arrester when the LED is Red, if the N line is on the left and the L line is on the right (facing the socket), the arrester PE terminal is not grounded; if the L line is on the left and the N line is on the right, the polarity of the arrester power cord should be reversed. In this case, open the power arrester and rectify the polarity of the connection. If the LED is still Red, the arrester PE terminal has not been grounded.

5.3.2 Installing the Ethernet Port Arrester

Please connect an Ethernet port arrester to the switch to prevent the damage by lightning before connecting an outdoor network cable to the switch.

Tools: Phillips screwdrivers or flat-head screwdriver, multimeter, and diagonal pliers

Installation Steps:

(1) Tear one side of the protective paper for the double-sided adhesive tape and paste the tape to the housing of the Ethernet port arrester. Tear the other side of the protective paper for the double-sided adhesive tape and paste the Ethernet port arrester to the switch housing. The paste position for the Ethernet port arrester should be as close to the ground terminal of the switch as possible.

(2) Based on the distance between the switch grounding stud and the Ethernet port arrester, cut the grounding cable for the Ethernet port arrester and firmly tighten the grounding cable to the grounding stud of the switch.

(3) Use a multimeter to check whether the grounding cable for the arrester is in good contact with the grounding stud and the housing of the switch.

(4) Connect the arrester by using an adapter cable (note that the external Ethernet cable is connected to the IN end, while the adapter cable connected to the switch is connected to the OUT end) and observe whether the LED on the borad is normal or not.

(5) Use a nylon cable tie to bundle the power cords.

Figure 5-6 Ethernet Port Arrester Installation

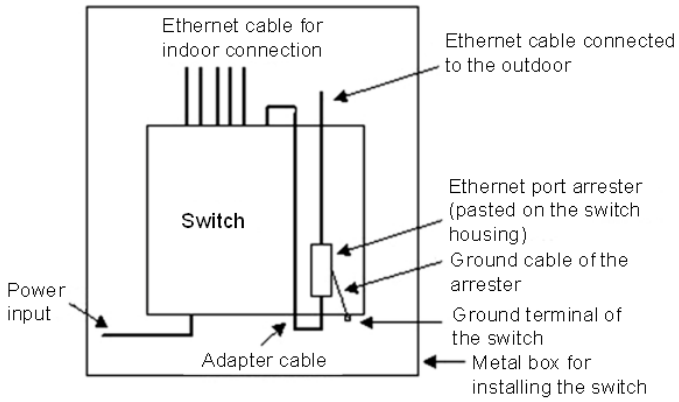

Caution

- The Ethernet port arrester is only for the 10/100M copper Ethernet ports with the RJ-45 connector;
- The Ethernet port arrester is not delivered with the switch. Please purchase it based on actual requirements.

During the actual installation, pay attention to the following items:

- Reversed installation direction of the arrester. Connect the external Ethernet cable to the IN end and connect the Ethernet port of the switch to the OUT end.
- Poor grounding of the arrester. The grounding cable of the arrester should be as short as possible to ensure that it is in good contact with the grounding stud of the switch. Use a multimeter to confirm the contact condition after the grounding.
- Incomplete arrester installation. If there is more than one port connected to the peer device on the switch, arresters need to be installed on all connection ports for the purpose of lightning protection.